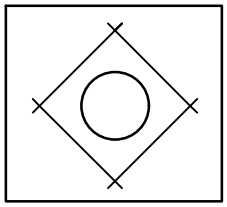

DETAIL OF REINFORCEMENT AROUND PIPE

CLR = CLEARANCE
MAX = MAXIMUM
MIN = MINIMUM
OC = ON CENTER
TYP = TYPICAL

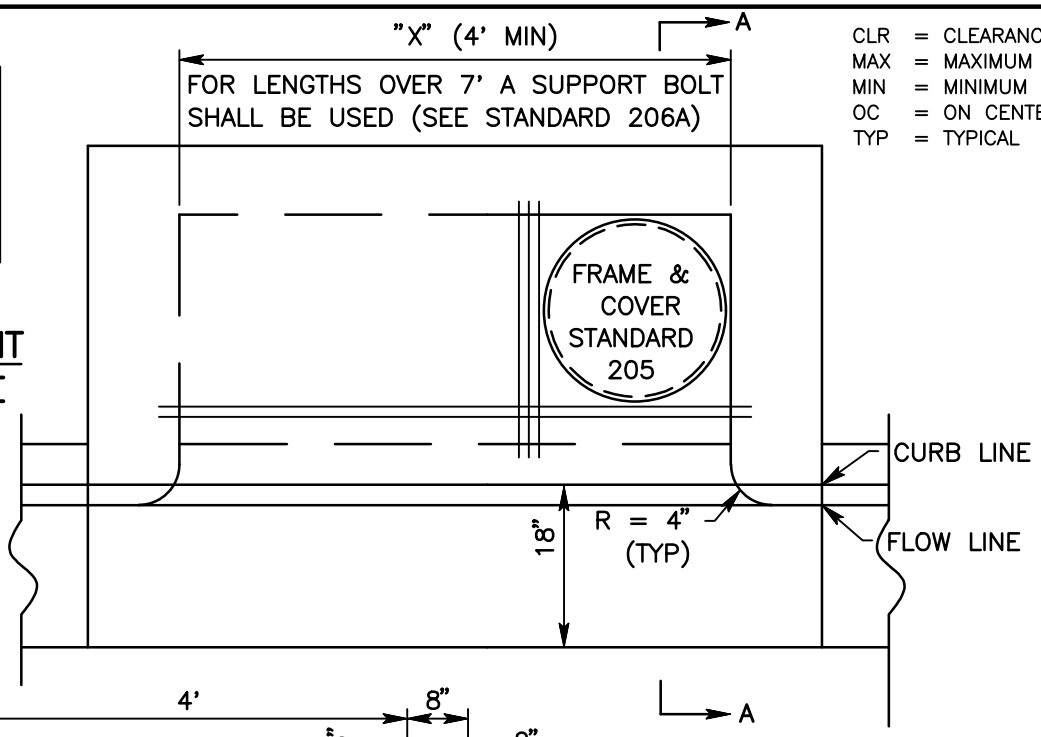

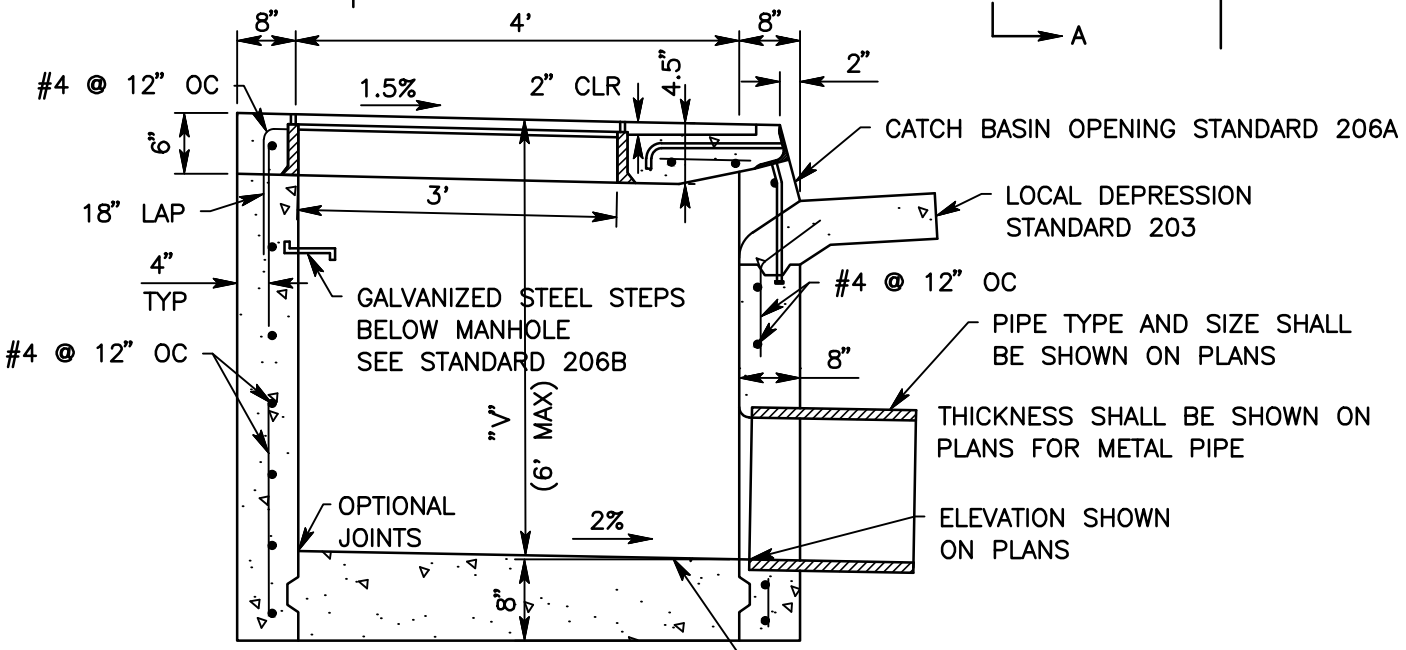

SECTION A–A

NOTES:

1. ALL REINFORCEMENTS SHALL BE #4 BARS AT 12" OC BOTH WAYS IN TOP SLAB AND WALLS.
2. CATCH BASIN SHALL BE CONSTRUCTED OF MINOR CONCRETE (MINOR STRUCTURE).
3. CURB AND GUTTER ADJOINING CATCH BASIN SHALL BE CONSTRUCTED PRIOR TO CONSTRUCTING TOP OF CATCH BASIN.

SAN BERNARDINO COUNTY DEPARTMENT OF PUBLIC WORKS

TYPE "A" CATCH BASIN

BRENDON P. BIGGS, PE
DIRECTOR OF PUBLIC WORKS/ROAD COMMISSIONER

206