DIA = DIAMETER
MAX – MAXIMUM
OC = ON CENTER

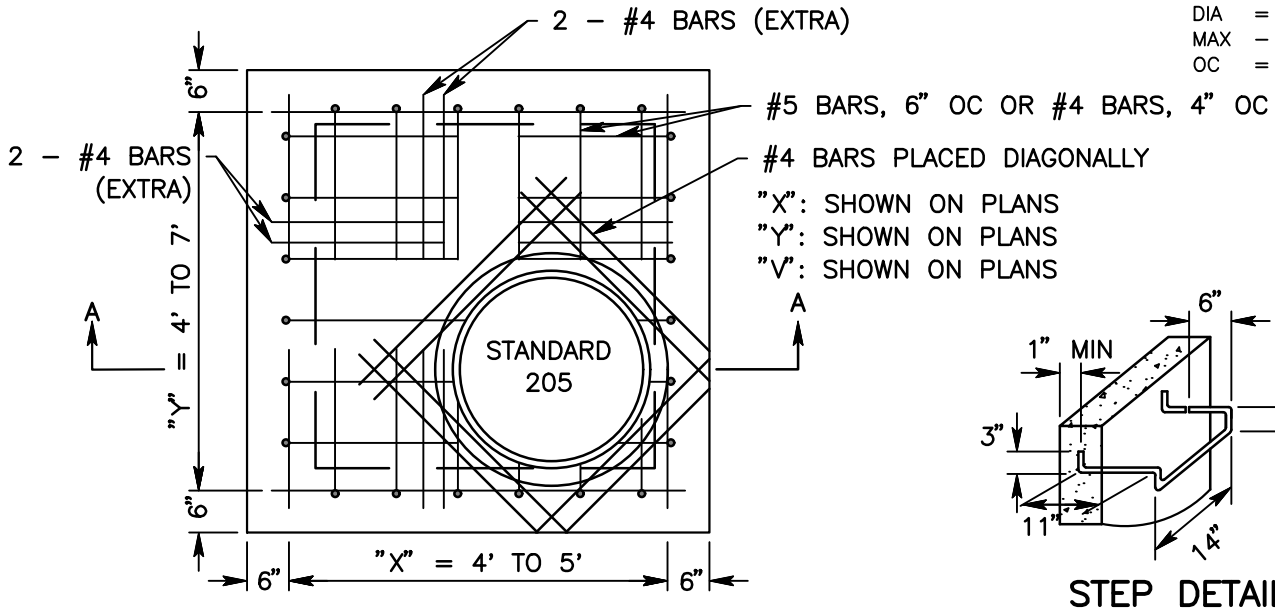

PLAN

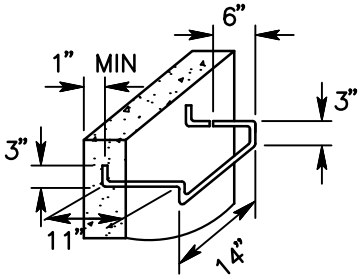

STEP DETAIL

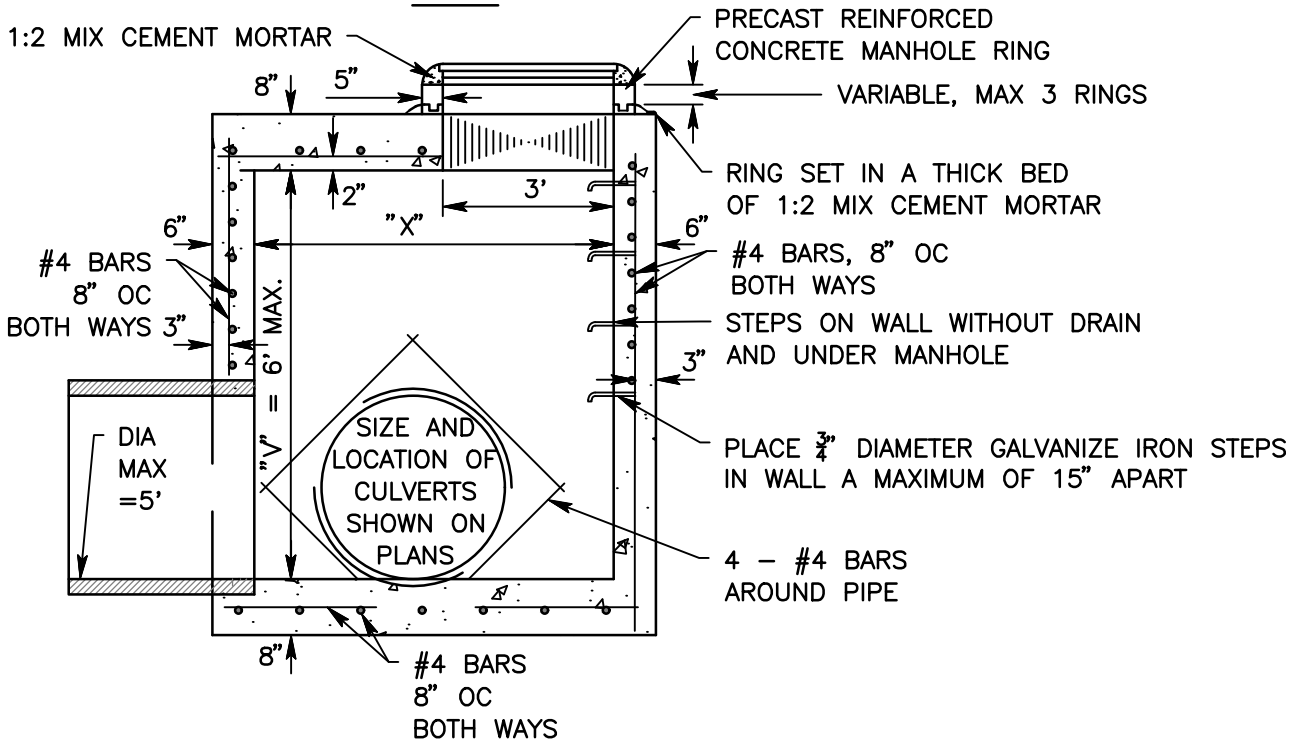

SECTION A–A

NOTES:

1. STORM DRAIN CLEANOUT SHALL BE CONSTRUCTED OF MINOR CONCRETE (MINOR STRUCTURE).
2. CLEARANCE FROM INSIDE DIAMETER OF PIPE TO CLEANOUT WALL SHALL BE 4" MINIMUM.
3. APPROVED PRECAST CONCRETE MANHOLE SHAFT RINGS WILL BE ACCEPTED IN LIEU OF CAST–IN–PLACE SHAFT.

SAN BERNARDINO COUNTY DEPARTMENT OF PUBLIC WORKS

STORM DRAIN CLEANOUT

BRENDON P. BIGGS, PE
DIRECTOR OF PUBLIC WORKS/ROAD COMMISSIONER

208